SBE - EPOXY COATED STEEL ENCLOSURES

Description:

Constructed from 1.2 mm thick steel and finished in RAL 7035, this unit is rated IP65 when fully sealed and comes complete with earth studs, a galvanised backplate, and a bottom gland plate; it is well suited for heavy-duty applications but is not recommended for outdoor use.



OTHER ADDITIONAL INFORMATION

Code	Height (mm)	Width (mm)	Depth (mm)	Fixing Holes Height (mm)	Fixing Holes Width (mm)	Internal Depth from Mounting Plate (mm)	Gland Plate (mm)	Mounting Plate (mm)	No. of Locks	No. of Gland Plates
SBE252515	250	250	150	208	208	138	157X89	200X200	1	1
SBE302015	300	200	150	258	158	138	157X89	250X150	1	1
SBE302515	300	250	150	258	208	138	157X89	250X200	1	1
SBE303015	300	300	150	258	258	138	89	218	1	1
SBE403020	400	300	200	358	258	188	89	218	1	1
SBE604020	600	400	200	558	358	188	148	346	2	1
SBE806020	800	600	200	758	558	188	148	446	2	1
SBE303020	300	300	200	258	258	188	208X89	250X250	1	1
SBE403015	400	300	150	358	258	138	208X89	350X250	1	1
SBE404020	400	400	200	358	358	188	346X148	350X350	1	1
SBE403025	400	300	250	358	258	238	208X89	350X250	1	1
SBE406020	400	600	200	358	558	188	446X148	350X550	1	1
SBE504020	500	400	200	458	358	188	346X148	450X350	1	1
SBE606020	600	600	200	558	558	188	446X148	550X550	2	1
SBE605020	600	500	200	558	458	188	446X148	550X450	2	1
SBE705030	700	500	300	658	458	288	446X148	650X450	2	1
SBE804030	800	400	300	758	358	288	346X148	750X350	2	1
SBE806030	800	600	300	758	558	288	446X148	750X550	2	1
SBE1008030	1000	800	300	958	758	288	446X148	950X750	2	1
SBE1208040	1200	800	400	1158	758	388	446X148	1150X750	2	1

Accessories Available:

SBEB: Steel Bracket (4 Pack)
SBEC: Core Lock & Key
SBEE: Earth Strap 220 x 4mm
SBEL: Barrel Lock and Key
SBEDOC: A4 Panel Mount/Document Holder
SBEK: Spare Key
Thermostats, hygrostats, and heaters also available via the Deligo website.

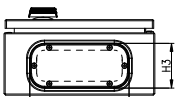

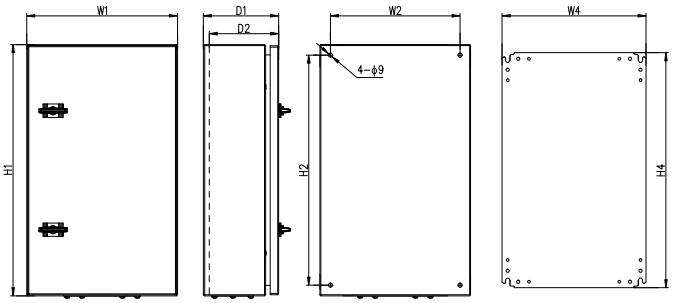

Deligo Ltd. 2026 - This document is provided to the public for information purposes only and is subjected to change without notice. Deligo Ltd make no promise of the document keeping the information contained within.